WS 16D Q3 7/4/2020

p1

Re-draw the circuit:

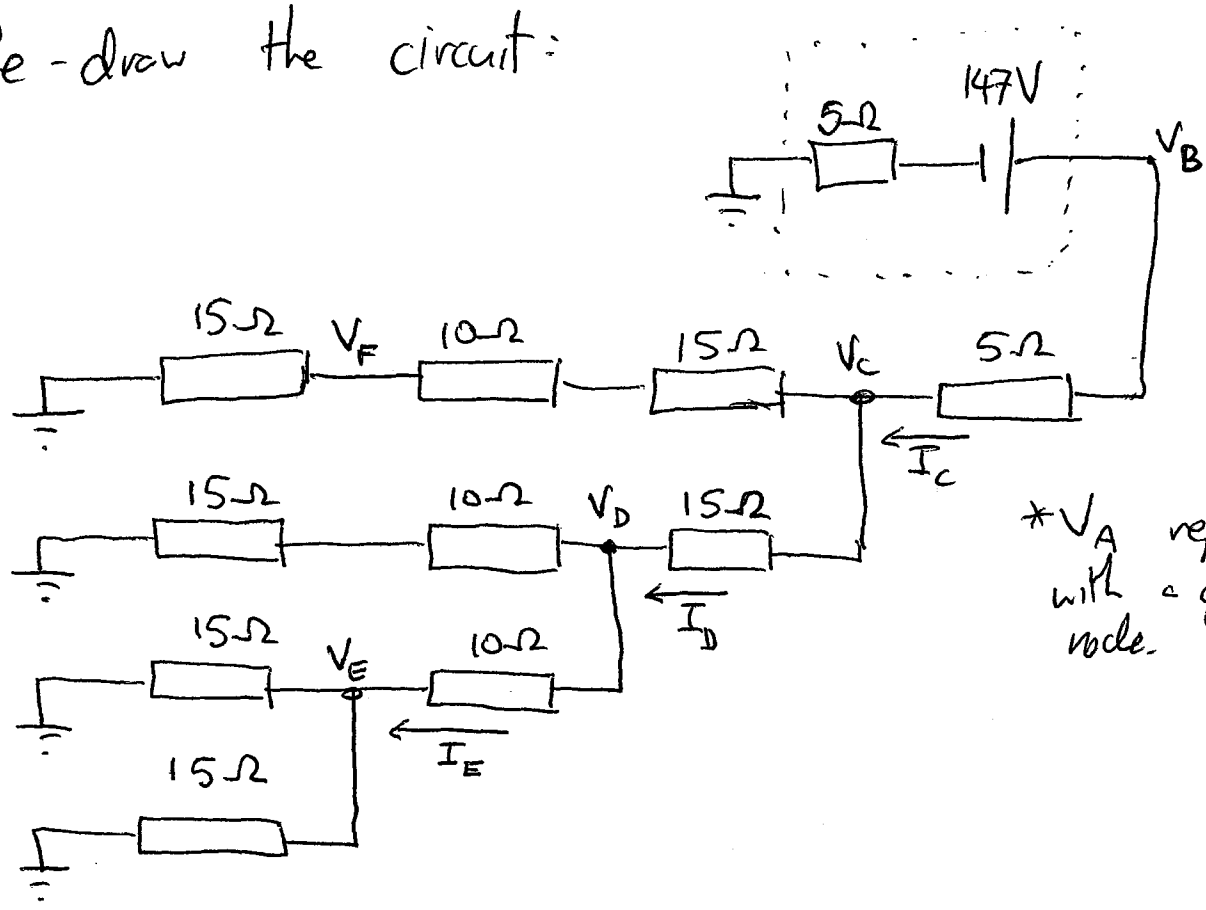

*V_A replaced with a ground node.

Some node voltages are quite simple to calculate from others using voltage divider equation:

$$V_E = V_D \cdot \frac{7.5}{17.5}$$

$$V_F = V_C \cdot \frac{15}{40}$$

* Use Kirchhoff's Voltage law to get V_B:

$$V_B = 147 - 5I_c$$

The rest have to be calculated using nodal analysis.

Simplify the circuit:
(The rest of the voltages can be calculated from the voltage divider equation

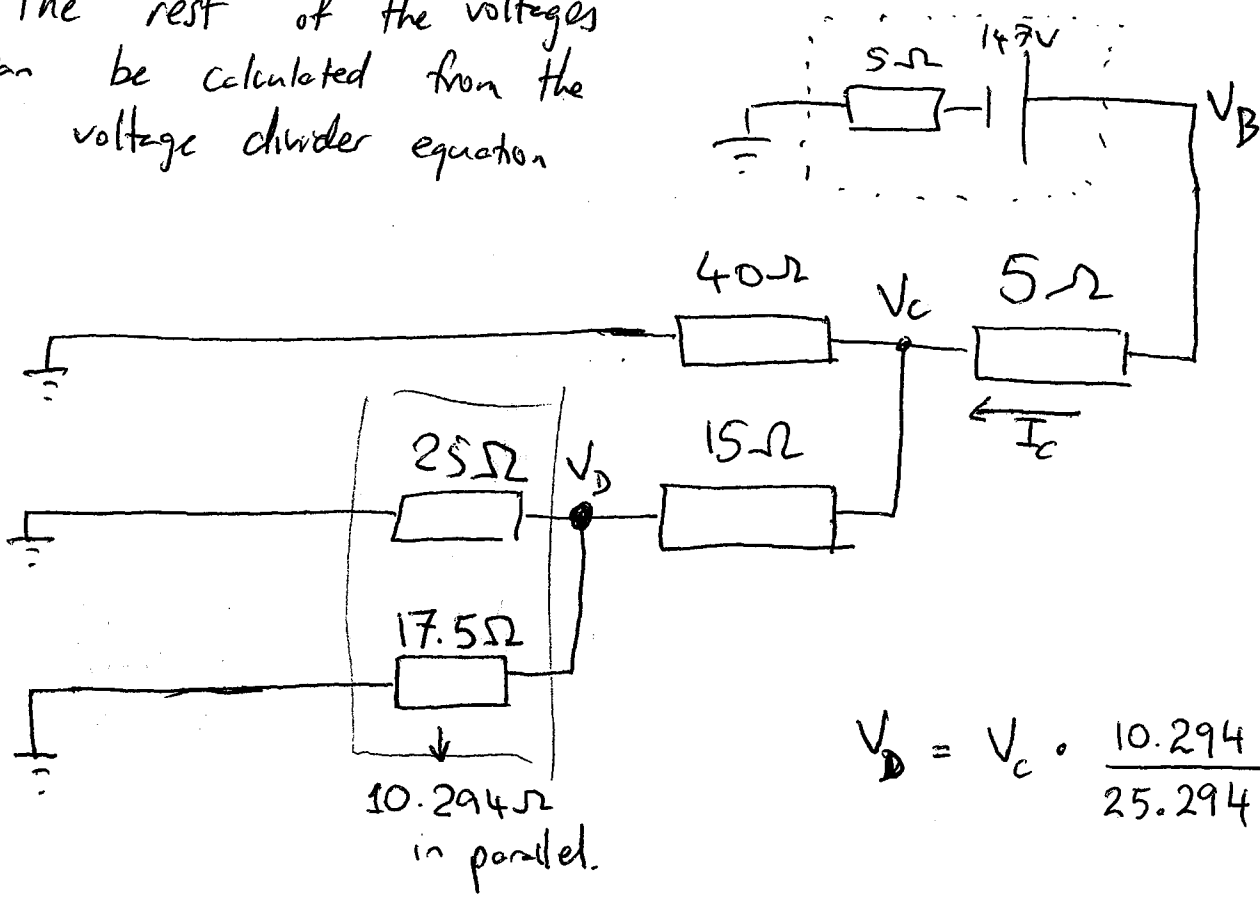

$$V_D = V_C \cdot \frac{10.294}{25.294}$$

Eliminate node D, since we have an equation for V_D.

$$V_C = V_B \cdot \frac{15.495}{20.495}$$

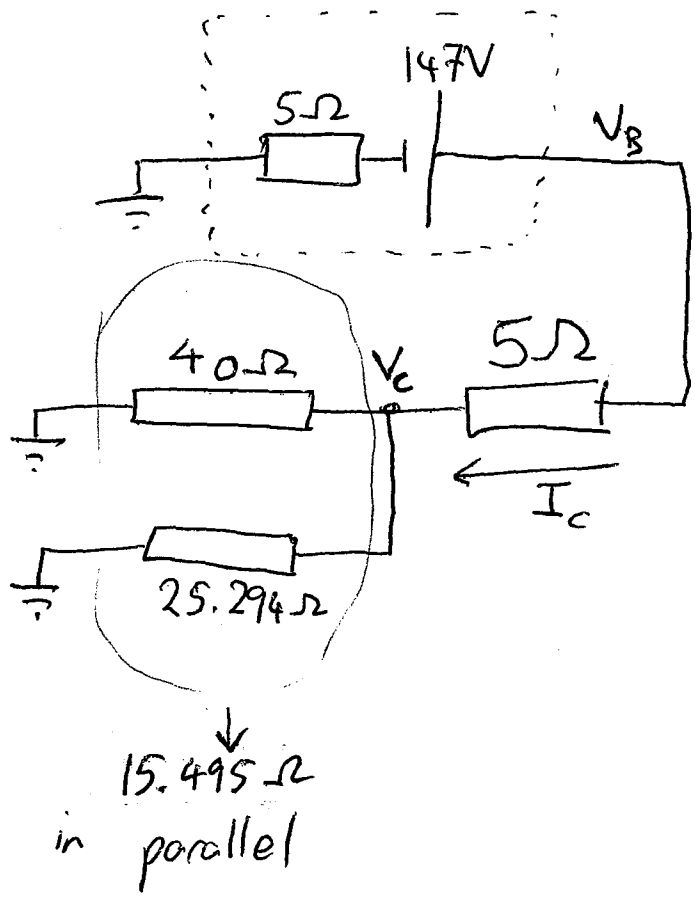

WS 16 D Q3

7/4/2020
p3

Eliminate Node C, since we have an equation for V_c.

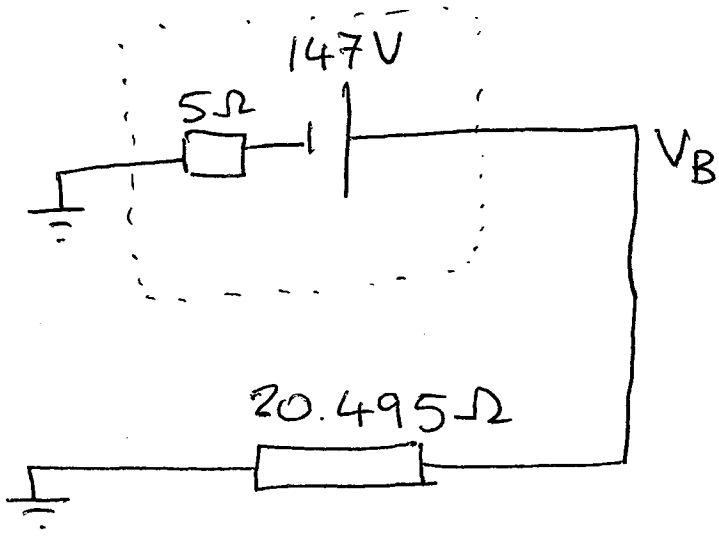

$$V_B = 147 \cdot \frac{20.495}{25.495}$$

The rest of the voltages can be back calculated from V_B.